New Motor Drive and Speed Control Techniques for Super-High-Speed Elevators

Eiki Watanabe, Narihiro Terazono, Shigehiko Suzuki
Shigemi Iwata, Toru Tanahashi
Mitsubishi Electric Corporation, Inazawa Works, Inazawa, Japan

Abstract

The age of super-high-speed elevators controlled by VVVF-Inverters has arrived. We, at Mitsubishi Electric Corp., have supplied VVVF controlled elevators to a new building belonging to the Tokyo Metropolitan Government Office in the spring of 1991, which travel at the speed of 540m/min. We are still continuing the development of VVVF controlled elevators, for even higher travelling speeds, which will be supplied to the LANDMARK TOWER Bldg. in Yokohama which is scheduled to be completed in the spring of 1993. We are aiming to achieve a speed of at least 700m/min., and the overall view of our studies of the development are described hereafter in this paper.

1. PREFACE

It has been approximately 100 years since modern-style elevators equipped with safety devices have been brought to the real world. It is estimated that millions of elevators are currently in service around the world. Elevators are now no longer perceived as just a means of transportation. Safety features, low energy consumption and architectural designs which are visually attractive to passengers have all become major concerns for both customers and manufacturers.

In Japan, the construction of high rise buildings is experiencing a second boom period, and due to this circumstance, elevators are expected to be intelligent and also to run at a super-high-speed.

At Mitsubishi, we have already supplied the world's fastest elevators, which travel at the speeds of 600m/min., to the Sun Shine 60 Bldg. in Tokyo in 1977. In fact, these elevators are listed in the Guiness Book of world records as "the world's fastest elevators", a record that has since then not been broken.

The rapid and ongoing construction of high rise buildings in Japan continually creates a demand for elevators which will run at higher speeds, and Mitsubishi is meeting that demand with the developing of even higher speed and more efficient elevators.

The history of our high speed elevators for Japan's market is shown in Fig. 1. Up to the point where our elevators were supplied to the Sun Shine 60 Bldg. in 1977, high speed elevators had been developed using the Ward-Leonard System (so-called "MG System"). In 1977, we started the application of the Thyristor-Leonard System, and during that period of the sky scraper construction boom, we reached the highest travelling speed of 360m/min. This system was then replaced by the VVVF-Inverter System around 1986, and presently as high rise buildings are riding the second crest of the boom, the VVVF-Inverter System is the major drive system developed and applied for the purpose of meeting the increasing demand toward high speed elevators. In the spring of 1991, we supplied VVVF-Inverter controlled elevators to a new building belonging to the Tokyo Metropolitan Government Office, whose travelling speed of 540m/min. has been recorded the world's fastest speed for VVVF-Inverter controlled elevators.

Additionally, we will supply the world's fastest elevators to the Yokohama LANDMARK TOWER Bldg. which will travel at least at 700m/min., and the studies and development for achieving the world's fastest speed record have been ongoing at Mitsubishi.

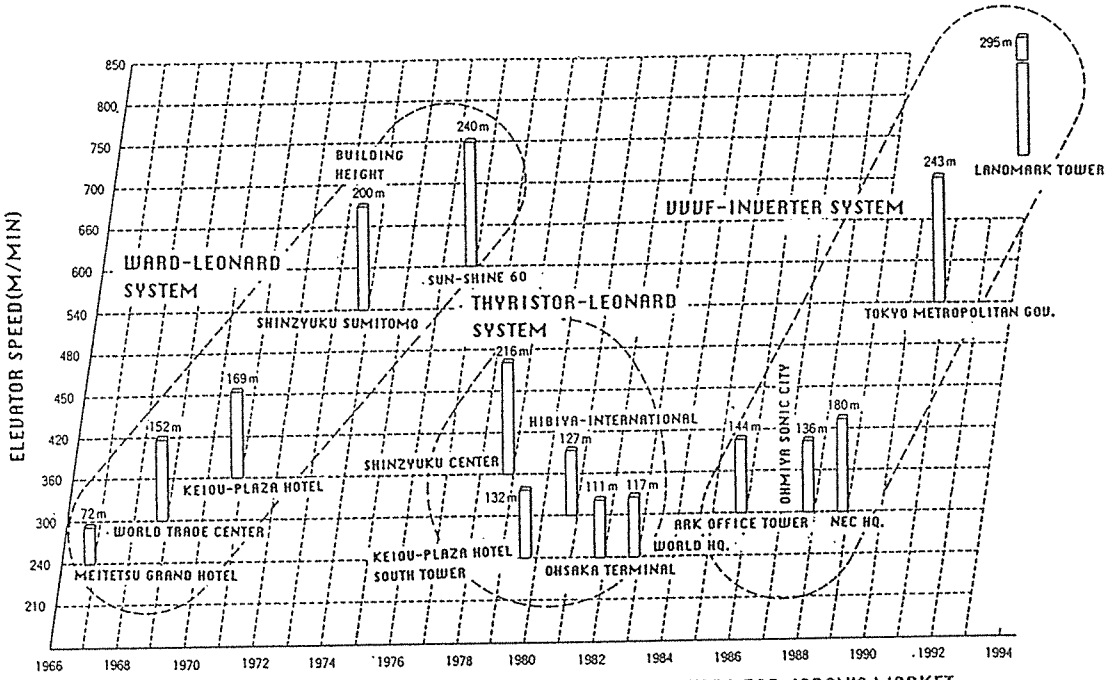

Fig.1 HISTORY OF MITSUBISHI HIGH-SPEED ELEVATORS FOR JAPAN'S MARKET

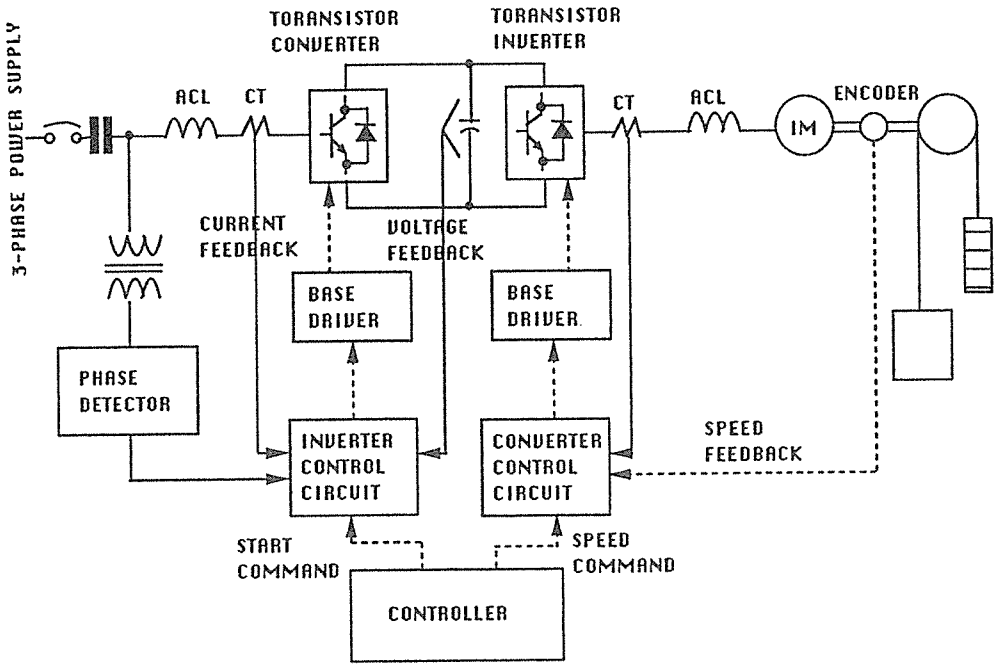

Fig.2 CONFIGURATION OF ELEVATOR DRIVE CONTROL SYSTEM FOR 540M/MIN

2. ELEVATOR SYSTEMS INSTALLED IN THE NEW TOKYO METROPOLITAN GOVERNMENT OFFICE BUILDING

The construction of the new building belonging to the Tokyo Metropolitan Government Office was completed in March 1991. The new building give the Tokyoites a gigantic monument that symbolizes Tokyo, one of the most advanced cities in the world.

The building consists of the following section: the first tower, the second tower, the conference complex and the public spaces for cultural activities. The first tower, 243-meter high, is currently Japan's tallest building and has 48 stories above the ground and 3 stories under the ground with a total floor space of 195,000m^2. The second tower, 163-meter high, has 34 stories above the ground and 3 stories under the ground with a total floor space of 141,000m^2. A total of 75 elevators and 12 escalators were installed in these two towers. Mitsubishi supplied 36 VVVF-Inverter controlled elevators and 2 hydraulic elevators to these towers. Four VVVF-Inverter controlled elevators with a rated speed of 540m/min. were installed at the north bank No. 4 and the characteristics and the techniques behind these elevators are reported in the following sections.

2.1 Configuration and Characteristics of Drive Control System

The configuration of the drive control system applied to our VVVF-Inverter controlled elevator is shown in Fig. 2. The 3-phase AC power is once converted to DC power through a transistor converter, and then converted to VVVF (variable voltage, variable frequency) AC power through a transistor inverter, which is supplied to the traction motor. Transistor modules with high insulation voltage and large capacity (1,200 V, 300 A) connected in parallel are applied to these converter and inverter. Both the input current and the output current are pulse-width modulated to form a sequential sinusoidal wave. The control circuitry is provided with a high-performance digital signal processor which enables accurate control. It means that the converter outputs constant voltage by a feedback loop control method, and the phase of the input current is controlled to make the power factor +1 for the power running mode and -1 for the regenerative mode. In the inverter control circuitry, a high-resolution pulse encoder is utilized for the speed feedback loop, and high speed response is made possible by applying a minor-loop current control.

This drive control system has the following characteristics:

(1) Because the electric current from the power source is pulse-width modulated to form a sequential sinusoidal wave, the relative harmonic contents are suppressed and the power factor is made almost 1. Therefore, the power source capacity required for this system is 30% lower that required for the conventional elevator system (Thyristor Leonard System).

(2) The magnetic noise caused by the AC motor has been reduced by applying the newly developed large-size gearless traction machine, since the traction machine has reinforced the rigidity of the AC motor and also the optimum number of the slots has been selected. In addition to this, the power consumption of this AC motor has been reduced by about 5% in comparison with that of a conventional DC motor.

2.2 Reduction of Vibration

A vibration control system is indispensable in order to achieve a comfortable ride with super-high-speed elevators. As buildings are becoming taller, the elevator ropes get longer. Due to this fact, the stiffness of the rope drive systems tend to be softer resulting in causing vertical vibration. We, at Mitsubishi, have been carrying out the research to develop the techniques in order to reduce elevator vertical vibration.

The vertical vibration of the elevator car increases when the frequency of the torque ripple of the motor coincides with the natural frequency of the mechanical system. Therefore, it

is important to reduce the torque ripple and to improve the mechanical damping characteristics, in order to reduce the vertical vibration.

(1) Countermeasures for Motor Torque Ripple

The torque ripple is reduced by the following methods:

(A) A function that automatically compensates the off-set voltage of the DC current transformer, to which a hall device is applied, is provided so that the output current from the inverter does not contain any DC component.

(B) Dead time, i.e. a period when no transistor elements in either of the arms of the bridge are activated, is generally designed in the PWM signal to prevent a short circuit between the upper and lower arms of the transistor bridge. However, this dead time is likely to cause voltage disturbances, which generates vibration when the motor rotates at a low speed. To solve this problem, the inverter output voltage is fed back to the control device which will then compensate the PWM signals to eliminate such voltage disturbances.

(C) The effectiveness of the vibration control circuit is further improved by reducing the operational cycle time resulting in quick response, and also by adjusting the gain automatically as the speed varies.

Fig. 3. compares the torque ripples at a low rotational speed before and after the improvement. The torque ripple is reduced to one fifth by the countermeasures.

(2) Countermeasures for Mechanical System

In the inverter control system, the frequency of the torque ripple is subject to change corresponding to the rotational speed of the motor. Therefore, it is almost impossible to prevent the motor from resonating in the mechanical system. Nevertheless, the sharpness of the resonance can be suppressed by adding an appropriate damping force to the mechanical system. We performed simulation to determine the proper damping constant for each part of the mechanical system. The result of the simulation is reflected in the actual damper setting.

Fig. 4 shows the simulation model. The physical constant such as dynamic spring constant and damping constant of both the ropes and the rubber vibration isolators, which are generally difficult to estimate through computation, were measured partially by vibration test. With these constants obtained from the test, we estimated, by computer simulation, the frequency response of the car floor vibration acceleration which was caused by the shaking of the sheave and traction motor. Some of the results are shown in Fig. 5. In this figure, it is observed that the vibration reached the peak around the frequency of 9Hz. The analysis of the vibration mode reveals that this is the mode where the shackle spring and the rubber vibration insulator move the most. According to this analysis, we applied dampers to these locations and succeeded in reducing the peak level by about 6db, as shown by the dotted line in Fig. 5.

Thus, the vertical vibration was reduced by determining the optimum damper positions and damping constant.

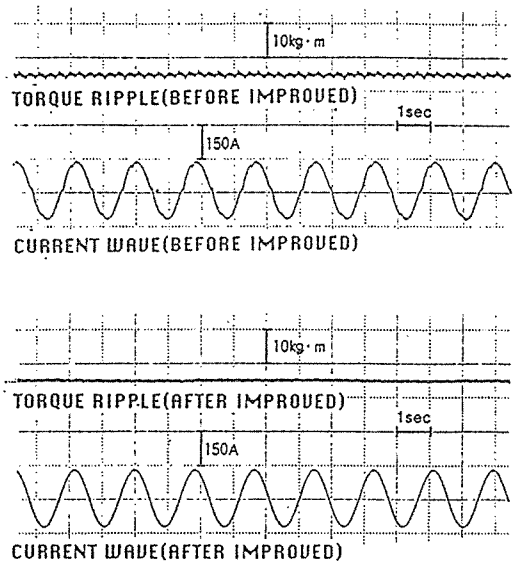

Fig.3 CURRENT WAVE FORM AND TORQUE RIPPLE

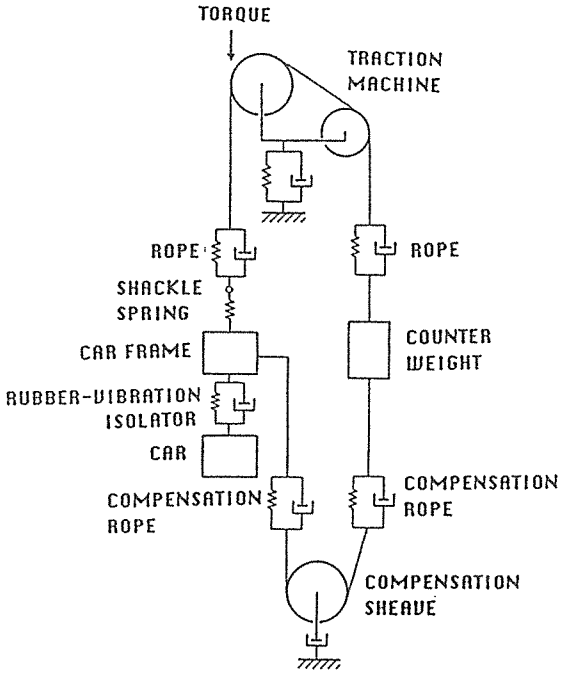

Fig.4 SIMULATION MODEL OF MECHANICAL SYSTEM

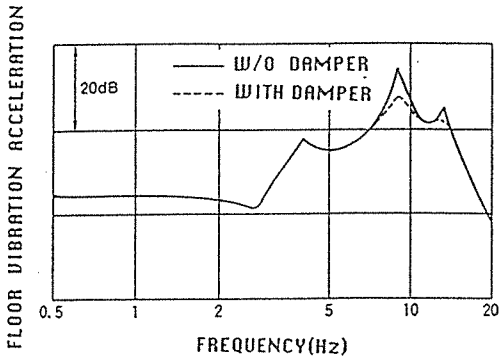

Fig.5 FREQUENCY RESPONSE OF ELEVATOR CAR

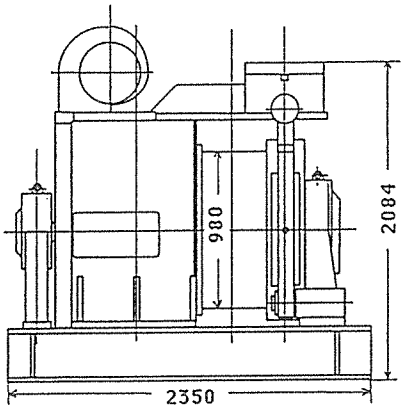

Fig.6 SIDE VIEW OF 120KW TRACTION MACHINE

3. SUPER-HIGH-SPEED ELEVATORS DEVELOPED FOR THE YOKOHAMA LANDMARK TOWER BUILDING

3.1 System

The system specifications of our products which were known for remarkable performances are shown in Table 1. The table includes the 600m/min. elevator supplied to the Sun Shine 60 Bldg., the aforementioned 540m/min. elevator supplied to the Tokyo Metropolitan Government Office Bldg., and the elevator currently being developed for the LANDMARK TOWER Bldg. (The travelling speed can not be officially announced at this present time. It is predicted that it will exceed 700m/min.)

The characteristics of the elevator developed for the LANDMARK TOV/ER are viewed as very unique and outstanding because of the application of 120 KW AC gearless traction machine which is the largest we have ever mounted on our products, the control device which drives this traction machine, the 4000mm-stroke buffer and also the safety gear to absorb stop energy that is twice as high or higher than that of 600m/min. elevators. This paper introduces the drive control device currently being developed.

3.2 Traction Machine

The side view of the traction machine is shown in Fig. 6. In comparison with a conventional traction machine, no major difference is observed in the structural aspect of the traction machine, but it employs an AC motor with large power capacity, 120 KW with 8 poles, and this all forms an AC-Gearless structure.

3.3 Configuration of Drive Control Device

As already explained, the VVVF-Inverter control system is the major control system presently applied to high speed elevators. Needless to say, we have adopted the VVVF- Inverter control system for the elevators which will be supplied to the LANDMARK TOWER Bldg. The elevator employs a converter/inverter whose respective arms have six 300A transistors connected in parallel, in order to supply the maximum current to the motor. The space inside one control panel, however, does not allow 6 transistors to be physically connected in parallel, and as the countermeasure, the output of 3 transistors connected in parallel is combined with that of the other 3 transistors which are connected in parallel.

As shown in Fig. 7, 5 individual control panels are used in this control system; 1) a receiving panel with a deion breaker, 2) reactor panel #1 equipped with input AC-reactors, 3) a power panel with converters, 4) a control panel with inverters, and, 5) reactor panel #2 equipped with output AC-reactors. As already mentioned, 2 sets of 3 transistors connected in parallel are employed for inverter #1 and #2 respectively. For an elevator with this control mechanism, the accurate control of the circulating current between inverter #1 and #2 plays a key role in order to achieve high quality elevator performances.

3.4 Simulation of Drive Control

The acceleration/deceleration distance required for this type of super-high-speed elevator exceeds 100m respectively, and this fact has made it impossible to perform the elevator test-run at the test tower located at our factory. In addition to this, there is not sufficient time for performing all the required tests and adjusting an elevator at an installation site, since it has been quite common for the last several years that a building construction schedule allows only a short length of time for the elevator installation.

Due to these circumstances, we have developed a simulator with which the performances of elevator drive control can be tested at our factory location. This simulator was used when developing the elevators for the Tokyo Metropolitan Government Office Building, which travel

TABLE 1. SYSTEM SPECIFICATIONS OF MITSUBISHI SUPER-HIGH-SPEED ELEVATORS

JOB	SUN-SHINE 60 (TOKYO)	TOKYO METROPOLITAN GOV. OFFICE BLDG.	YOKOHAMA LANDMARK TOWER
SPEED	600M/MIN	540M/MIN	700M/MIN OR FASTER
COMPLETION DATE	1977	1991	1993
TRAVEL	227m	190m	267m
TRACTION MACHINE	103KW DC-GEARLESS	83KW AC-GEARLESS	120KW AC-GEARLESS
ROPE DIA.	16mm	16mm	18mm
BUFFER STROKE	2800mm with ETS	2800mm with ETS	4000mm with ETS
RAIL	30Kg	30Kg	37Kg
MOTOR DRIVE	WARD-LEONARD	VVVF-INVERTER	VVVF-INVERTER
CONTROL EQUIPMENT	RELAY	MICRO-PROCESSOR	MICRO-PROCESSOR

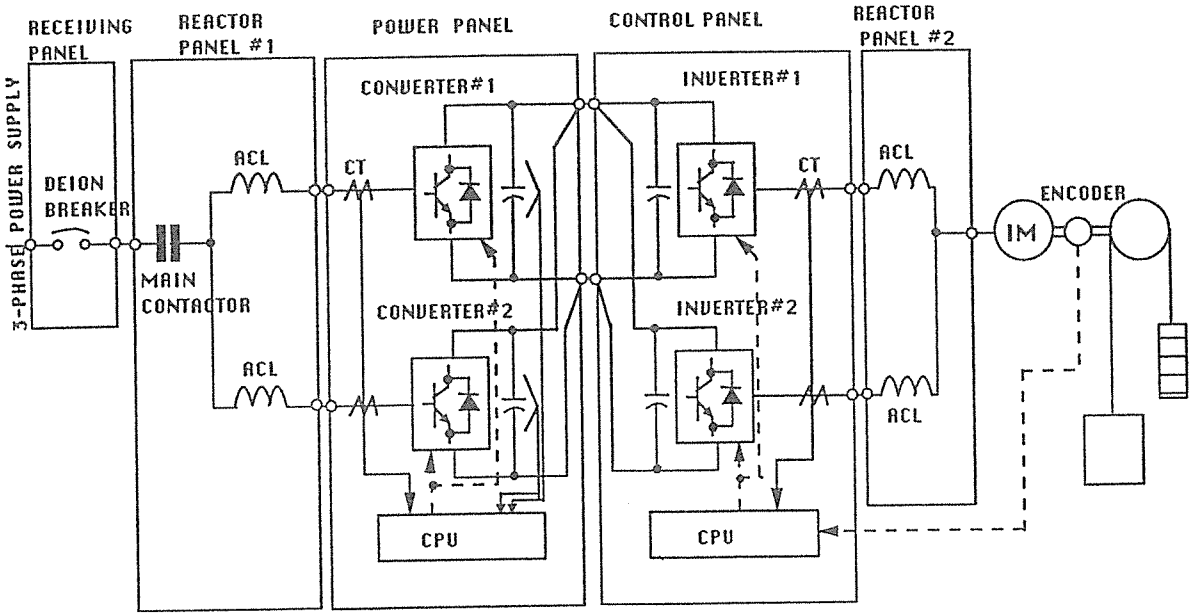

Fig.7 CONFIGURATION OF ELEVATOR DRIVE CONTROL SYSTEM FOR 700M/MIN OR FASTER

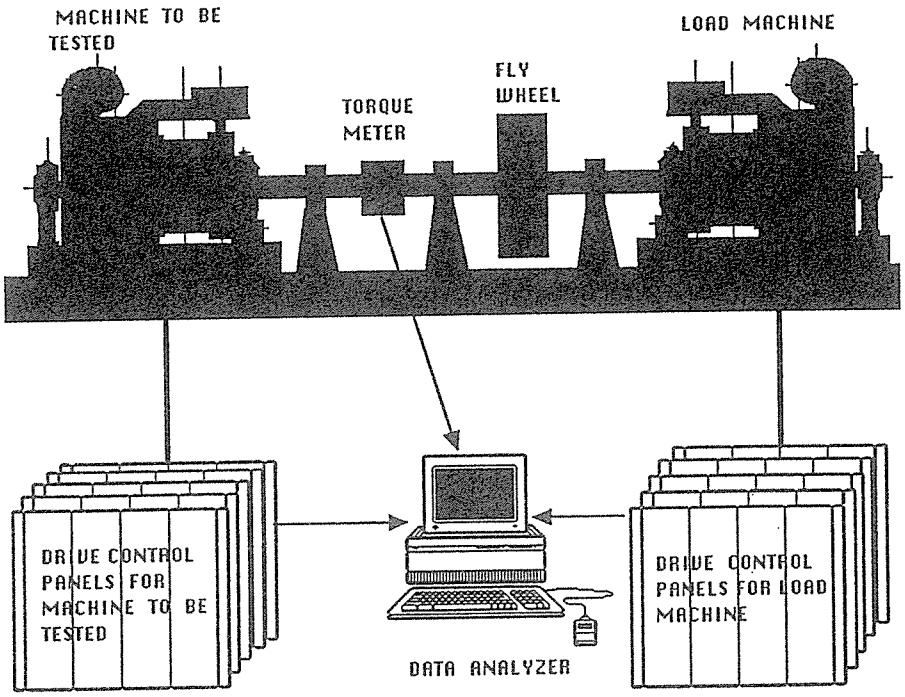

Fig.8 CONFIGURATION OF SIMULATOR FOR SUPER-HIGH-SPEED ELEVATOR

at 540m/min., and the elevators' performances at the customers site have been extremely satisfactory. At this present time, we have completed almost all the tests required for the 120 KW motors which are going to be adopted for the LANDMARK TOWER project.

Fig. 8 shows the outline of our simulator. The machine to be tested and the load machine are directly linked by a fly wheel, and a torque meter is mounted between these two machines. The drive control panels (shown in Fig. 7) which will actually be used for the elevator at the customer's site are connected to the machine to be tested in order to test the control panels. Furthermore, the load machine control panels are connected with the load machine. The voltage and current which vary in accordance with the speed control command for actual elevator operation (the command for acceleration, stable travelling speed and for deceleration) are fed from the drive control panels to the machine. The load machine supplies torque equivalent to the power for the power running mode and for the regenerative mode. Thus, our simulator made it possible to perform tests for the situation where the apparatuses to be tested are set in almost the same condition as they are on the actual product.

4. CONCLUSION

The control system of the elevators which were supplied to the Tokyo Metropolitan Government Office Bldg. and also those of the elevators currently being developed for a higher travelling speed for the Yokohama LANDMARK TOWER Bldg., were introduced here, focusing on the aspect of the unique drive control system.

Plans for constructing high rise buildings exceeding 1,000 meters in order to maximize efficient space consumption in urban areas will become a reality in the 21st century. To meet these highly technological demands of the future, we, at Mitsubishi, are dedicated to providing continual research, development and manufacturing of super-high- speed elevators.

Author Biographical Details:

Eiki Watanabe
Born 1941 in Osaka, Japan.
Electrical Engineering Degree from Osaka University in 1963.
Joined Mitsubishi Electric Corporation, Japan, in 1963.
Presently Manager of Development Department of Inazawa Works,
Mitsubishi Electric Corporation, Japan.

Narihiro Terazono
Born 1941 in Kagoshima, Japan.
Electronic Engineering Master's Degree from Kyushu University in 1965.
Joined Mitsubishi Electric Corp. (Japan) in 1965.
Presently Manager of Manufacturing Planning Department of Inazawa Works, Mitsubishi Electric Corp., Japan.

Shigehiko Suzuki
Born 1943 in Aichi, Japan.
Electronic Engineering Master's Degree from Nagoya University in 1969.
Joined Mitsubishi Electric Corp. (Japan) in 1969.
Presently Deputy Manager of Development Department of Inazawa Works,
Mitsubishi Electric Corp., Japan.

Shigemi Iwata
Born 1951 in Aichi, Japan.
Information Engineering Master's Degree from Nagoya University in 1975.
Joined Mitsubishi Electric Corp. (Japan) in 1975.
Presently Manager of Elevator Electrical Development Section of Inazawa Works, Mitsubishi Electric Corp., Japan.

Toru Tanahashi
Born in 1950 in Gifu, Japan.
Electric Engineering Degree from Nagoya Institute of Technology College in 1973.
Joined Mitsubishi Electric Corp. (Japan) in 1973.
Presently Manager of Elevator Electrical Development Section of Inazawa Works, Mitsubishi Electric Corp., Japan.